## TP PLATE THERMOCOUPLE

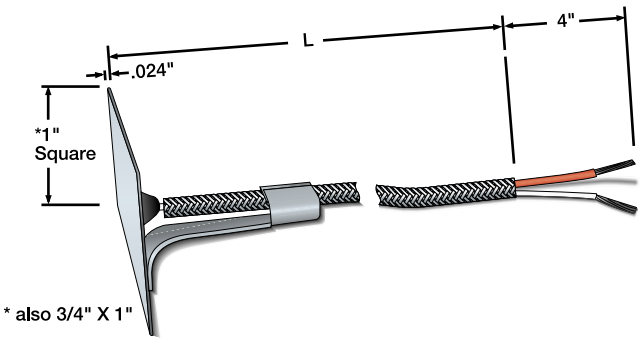


TP - □ □ □ □ □ □ □

1 2 3 4 5 6 7

**Calibration**
**J** = Iron/Constantan
**K** = Chromel/Alumel

**Leads**
**B** = Flexible Metal Braid
**F** = Fiberglass Leads

**Plate Size**
**A** = 1" x 1"
**B** = ¾" x 1"

**F Dimension in Inches**

**Termination**
**L** = Stripped Leads
**P** = Plug
**F** = Receptacle
**B** = BX Connector
**Z** = Special

**EXAMPLE:** TP—JA024L